REVERSIBLE BRUSHED DC RIGHT-ANGLED GEARMOTOR

Model Number:

MMP S22-346G-24V GRA52-408

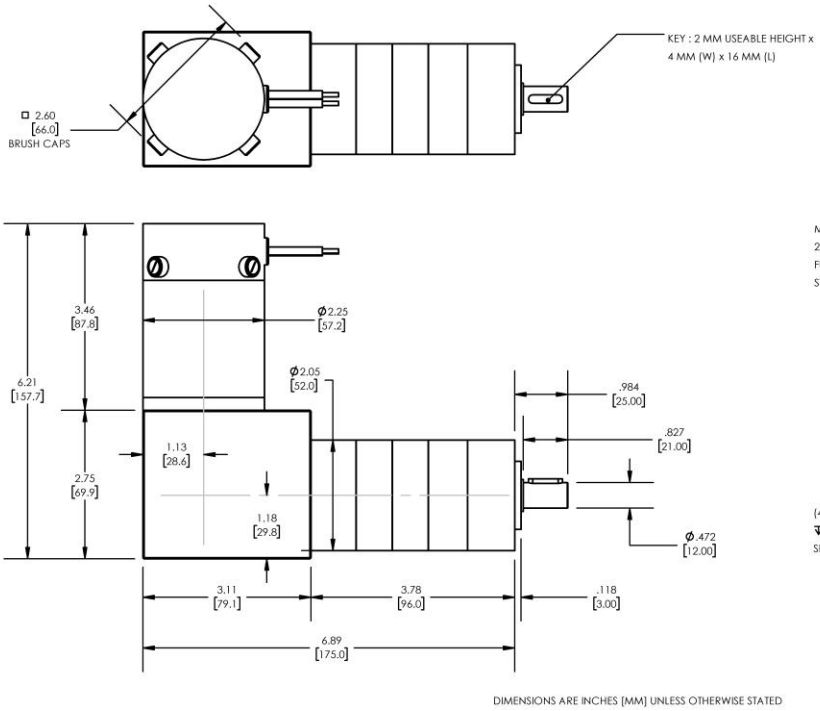

PLANETARY GEARMOTOR OUTPUT PARAMETERS:	VALUE	UNITS	TOLERANCE
Gearhead Ratio (exact)	407.89 : 1		
Gearhead Shaft Output Speed (at full-load)	8.6	RPM	MAX
Gearmotor Rated Continuous Torque	443	In-Lbs	MAX
Gearmotor Rated Peak Torque	443++	In-Lbs	-----
Gearhead Standard Backlash	51	Arc Minutes	MAX
Gearhead Efficiency	65%	-----	-----
Output Shaft Radial Load Capacity	113	Lbs	MAX
Output Shaft Axial Load Capacity	45	Lbs	MAX
Gearmotor Total Weight	6.5	Lbs	MAX

++ All Peak Torque values are dependent upon duty. Contact our sales office for details.

DC MOTOR PERFORMANCE PARAMETERS:	VALUE	UNITS	TOLERANCE
Rated DC Voltage	24	DC VOLTS	-----
Rated Continuous Current	4.4	AMPERES	-----
No-Load Speed	4000	RPM	MAX
Rated Speed	3513	RPM	+/- 15%
Rated Continuous Power Out	69	WATTS	+/- 15%
Rated Continuous Torque	27	OZ-IN	-----
Peak Torque (motor only)	194	OZ-IN	-----
No-Load Current	1.05	AMPERES	MAX
Back EMF Constant (Ke)	6.0	V/KRPM	+/- 10%
Torque Constant (Kt)	8.1	OZ-IN/AMP	+/- 10%
DC Armature Resistance	0.67	OHMS	+/- 15%
Armature Inductance	0.28	mH	+/- 15%
Armature temperature	155	DEG. C	MAX

NOTES:

- ENCODER & BRAKE OPTIONS AVAILABLE – FOLLOW THIS LINK FOR DETAILS
- NEMA MOUNTING FLANGE OPTION AVAILABLE – FOLLOW THIS LINK FOR DETAILS